MASS: 466637.50 kg

ALL DIMENSIONS ARE IN-mm

BENDING: K-FACTOR:
MACHINING:
TAPPING:

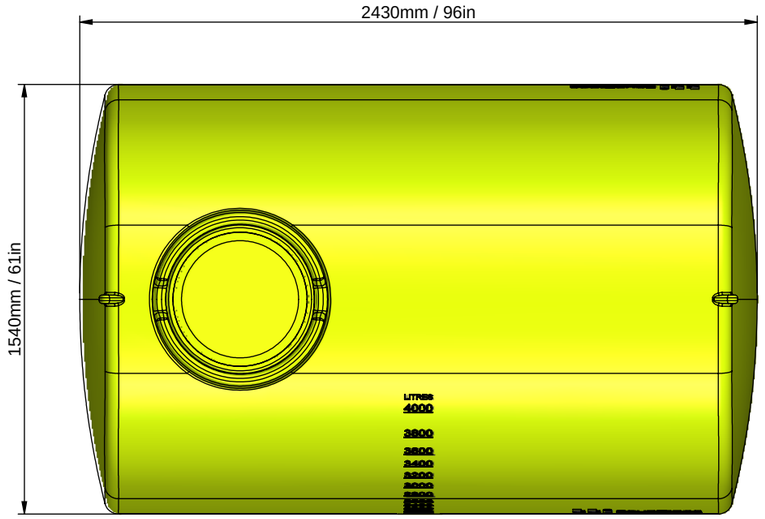

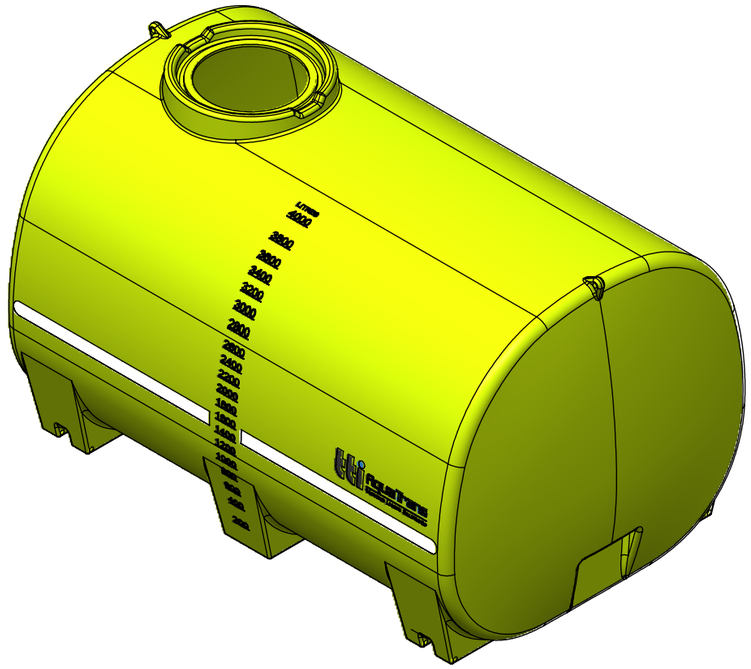

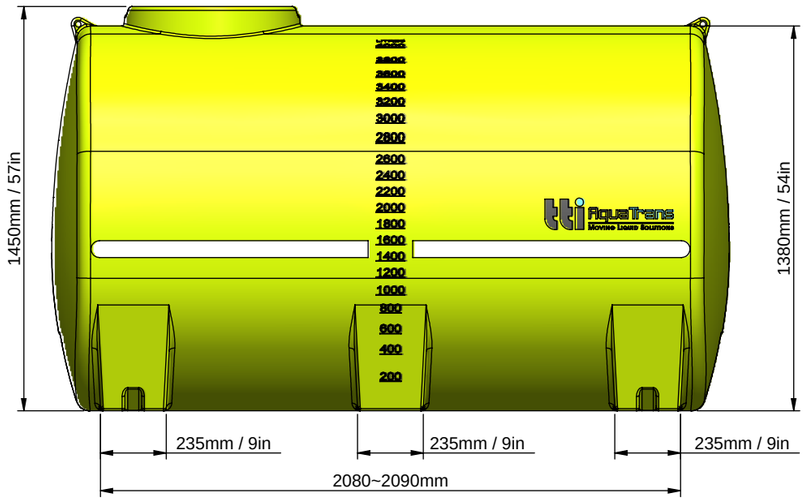

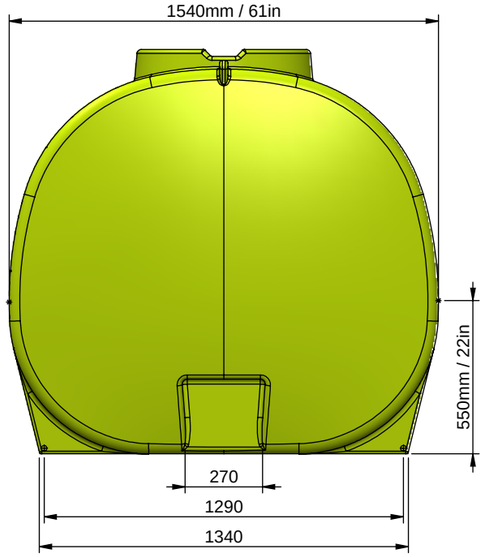

MATERIAL: LLDPE
MATERIAL SIZE:

NOTES:
1. WORK TO DIMENSIONS. DO NOT SCALE.
2. REMOVE ALL VISIBLE BURRS.

GENERAL TOLERANCES UNLESS NOTED
Â 0 Ñ0.5
Â 0.0 Ñ0.25
Â 0.00 Ñ0.1
Â ANGLE Ñ1/2Â
Â FINISH 3.2Õm

NOTES	REV	DESCRIPTION	DRN	CHK/APP	DATE

TransTank International
Australia's Safest Tanks and Trailers

This drawing is the property of TransTank International. It cannot be copied in part or in full with out the written permission of TTI.

SCALE	NONE	DWG NO. PTC04000SG
SHT SIZE	A3	REVISION 1 OF 1
DATE	14/04/2016	DESCRIPTION 4,000L AQUA TANK
DRN	JB	
CHK	RB	FILE NAME TANK DRAWING
APP	RB	